LIVE
LV00118/1IX

NOBILI®
The Best Technology for Water

Image

Technical drawing

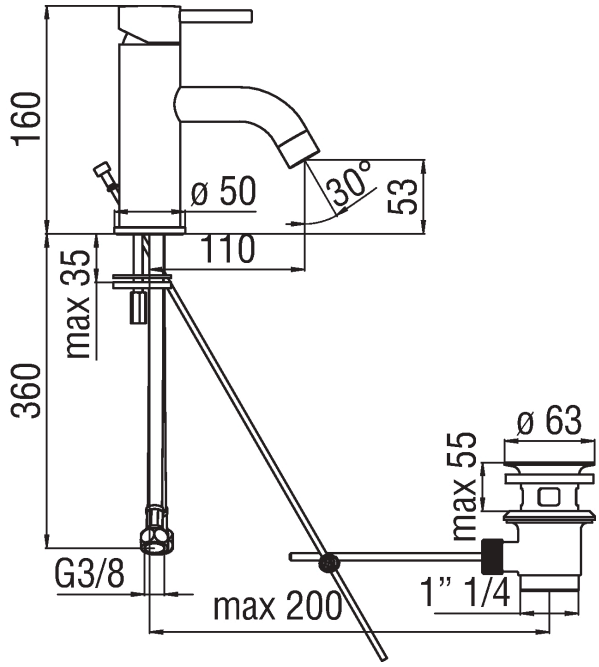

Specifications

Washbasin
Single control
Cartridge ø 35 mm
Dynamic flow limiter (-50%)
The temperature limiter
AERATOR RAEK221/13IX
Flexible Parigi® SPX® stainless steel ø 3/8"
Packaging: 41,2 x 16,4 x 7,1 cm / 0,004797 m' / 1,9 kg
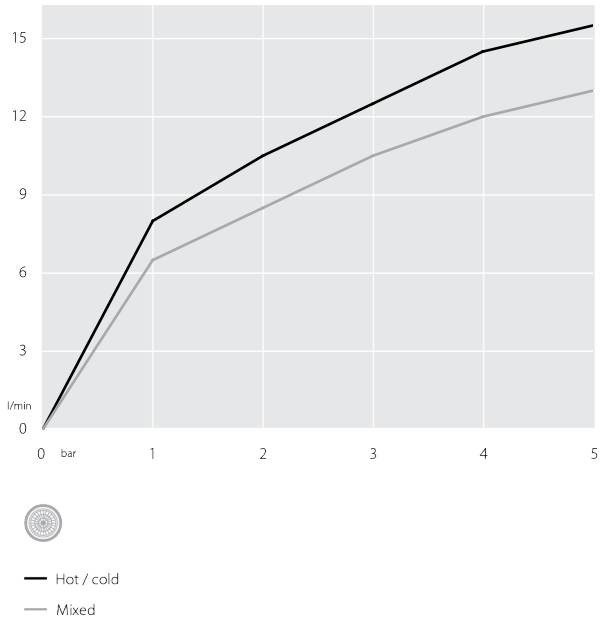
Flow rate diagram